# Palift PALAZZANI XTJ 140+ SPIDER CRANE

**BI-ENERGY**

Diesel
32,5 kW

Single-phase
Electric motor
110VAC - 2,2 kW

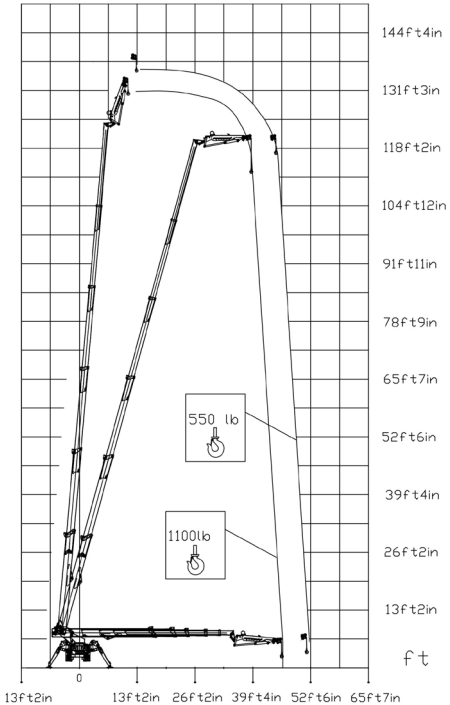


| 1100 lb | 550 lb |
|---|---|
| 44 ft 3 in | 43 ft 10 in |

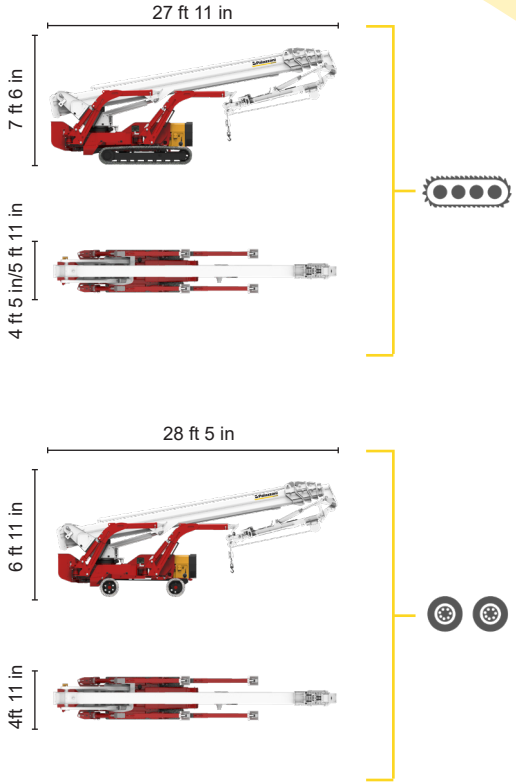


| | | | | | | | | | | | | | | | |
|---|---|---|---|---|---|---|---|---|---|---|---|---|---|---|---|
| XTJ 140+/C | | 131 ft 3 in | 44 ft 3 in | 1100 lb | 660° | 7 ft 10 in x 2 ft 4 in | 90°+80° | 11 ft 11 in/17 ft 1 in | 23% | 38% | 1,24 mph | 24030 lb | 16860 lb | 73,3 psf | 112,6 psf |
| XTJ 140+/W | | 131 ft 3 in | 44 ft 3 in | 1100 lb | 660° | 7 ft 10 in x 2 ft 4 in | 90°+80° | 11 ft 11 in/17 ft 2 in | 23% | 16% | 0,87 mph | 24030 lb | 16860 lb | 73,3 psf | 109,6 psf |

Available power options:

**BI-ENERGY** (DIESEL+AC)

**ECO** (AC+BATTERY)

Characteristics and technical data are informative only and subjected to change without notice.


Palazzani Industrie S.p.A.
Via del Pavione, 4 - 25050 - Paderno F.C. (BS) - Italy
Tel. (+39) 0306857073
info@palazzani.it
www.palazzani.it


Palazzani INDUSTRIE

QUALITY SYSTEM
CERTIFIED BY BUREAU VERITAS
= ISO 9001=

NC 843 A 22

# Palift PALAZZANI XTJ 140+ SPIDER CRANE

**ECO**

Single-phase Electric motor

Lithium iron phosphate battery LiFePO4

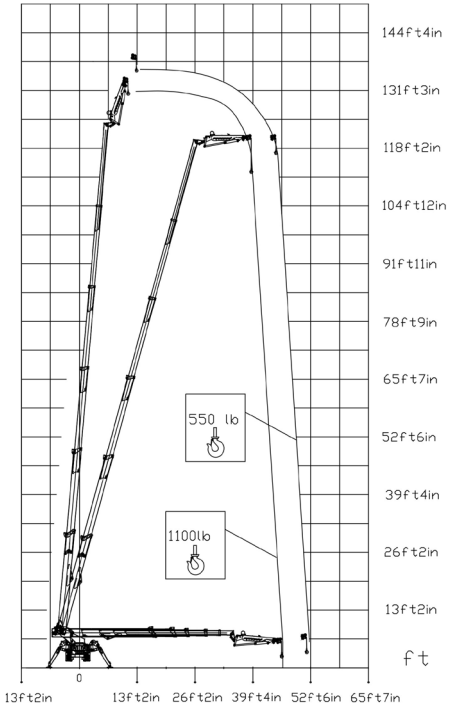


| 1100 lb | 550 lb |
|---|---|
| 44 ft 3 in | 43 ft 10 in |

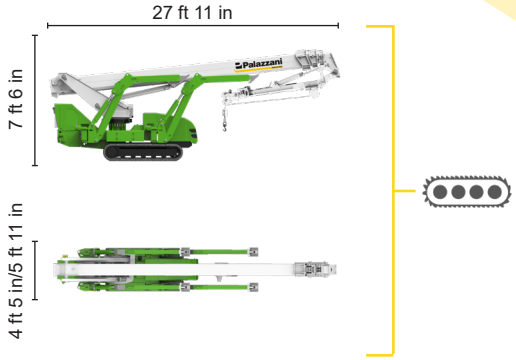


| | | | | | | | | | | | | | | | | |
|---|---|---|---|---|---|---|---|---|---|---|---|---|---|---|---|---|
| XTJ 140+/C | | 131 ft 3 in | 44 ft 3 in | 1100 lb | 660° | 7 ft 10 in x 2 ft 4 in | 90°+80° | 11 ft 11 in/17 ft 1 in | 23% | 38% | 1,24 mph | 24030 lb | 16860 lb | 73,3 psf | 112,6 psf |

Available power options:

**BI-ENERGY** (DIESEL+AC)

**ECO** (AC+BATTERY)

Characteristics and technical data are informative only and subjected to change without notice.


Palazzani Industrie S.p.A.
Via del Pavione, 4 - 25050 - Paderno F.C. (BS) - Italy
Tel. (+39) 0306857073
info@palazzani.it
www.palazzani.it


Palazzani INDUSTRIE

QUALITY SYSTEM
CERTIFIED BY BUREAU VERITAS
= ISO 9001=

NC 845 A 22